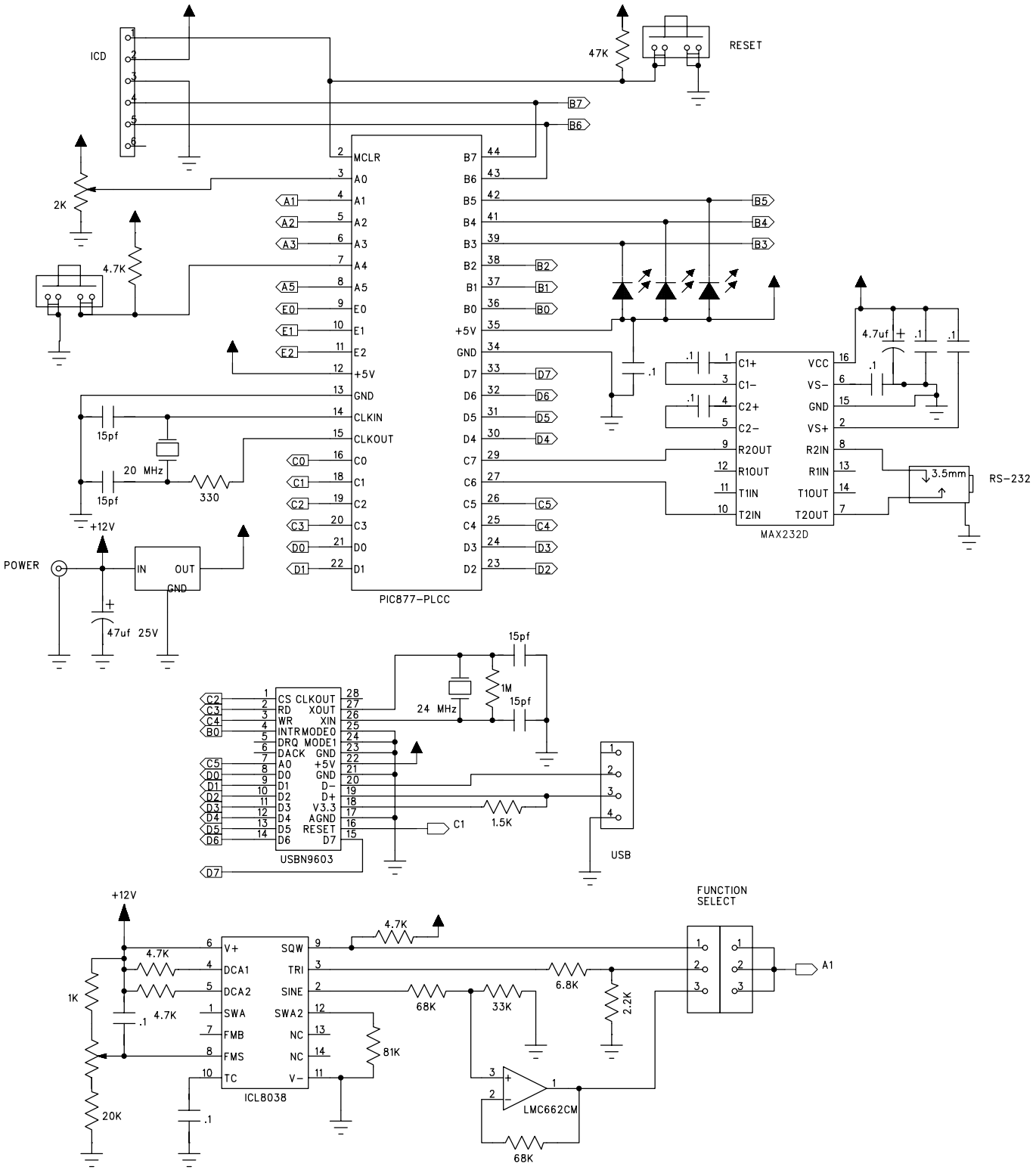
ICD
RESET
47K
2K
4.7K
MCLR
A0
A1
A2
A3
A4
A5
E0
E1
E2
+5V
GND
CLKIN
CLKOUT
C0
C1
C2
C3
D0
D1
B7
B6
B5
B4
B3
B2
B1
B0
D7
D6
D5
D4
C7
C6
C5
C4
D3
D2
PIC877-PLCC
15pf
20 MHz
330
+12V
POWER
IN
OUT
GND
47uf 25V
C1+
C1-
C2+
C2-
R2OUT
R1OUT
T1IN
T2IN
VCC
VS-
VS+
R2IN
R1IN
T1OUT
T2OUT
MAX232D
4.7uf
3.5mm
RS-232
CS CLKOUT
RD XOUT
WR XIN
INTR MODE0
DRQ MODE1
DACK GND
A0 +5V
D0 GND
D1 D-
D2 D+
D3 V3.3
D4 AGND
D5 RESET
D6 D7
USBN9603
24 MHz
1M
1.5K
USB
FUNCTION SELECT
V+
DCA1
DCA2
SWA
FMB
FMS
TC
SQW
TRI
SINE
SWA2
NC
V-
ICL8038
68K
33K
6.8K
2.2K
81K
20K
LMC662CM
A1